Part No. SF3-2AJAPK

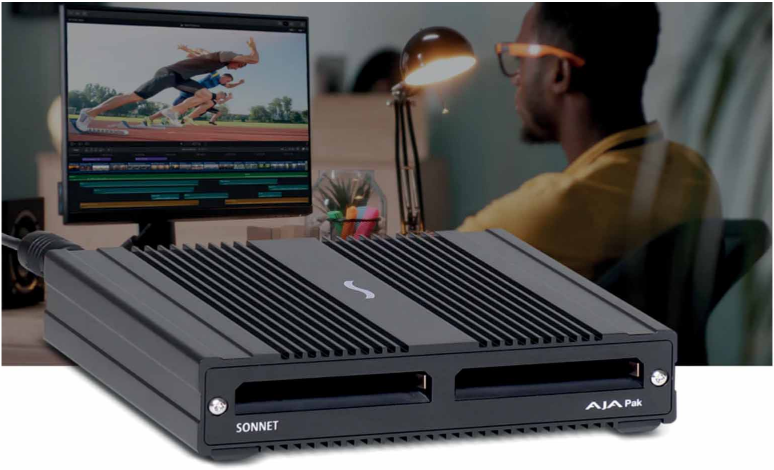

Leader of the PAK

SF3 Series - AJA PAK Media Pro Card Reader

Professional Dual-slot AJA PAK Media Card Reader for Computers with Thunderbolt 4 or Thunderbolt 3 Ports

Supports AJA PAK Media Cards at Full Speed. Superior Dual-slot Ingest Performance – When your multicam live event production, documentary, news or sports programming is captured to AJA® Video System's Ki Pro® Ultra 12G 12G-SDI4K/UHD/HD recorder and player, your footage is recorded on ultra-reliable AJA PAK Media SSD cards. With the recorder's ability to support four channels of simultaneous 1080p at 60 fps recording — or a 4K at 60 fps recording in single-channel mode — those cards fill up fast. The need for a tool that accelerates offloading media files from multiple cards is greater than ever, too. The Sonnet SF3™ Series - AJA PAK Media Pro Card Reader is the perfect tool for the job.

SONNET
AJA Pak
2

Ingest Simultaneously from Two Cards. Dual Card Slots, Dual Productivity.

Certified by AJA, the SF3 Series - AJA PAK Media Pro Card Reader ingests media files from PAK Media memory cards at the fastest speeds the cards will support to any computer with Thunderbolt 4 or Thunderbolt 3 ports. And, for even greater efficiency, it can ingest files simultaneously from two cards at high speed — up to 1030 MB/s — to cut your ingest times in half.

Ingest Six Cards Simultaneously – Daisy Chain Power

Because Sonnet's PAK Media reader features a dual-port, 40Gbps Thunderbolt interface, you can daisy chain up to six of them together to a single port on your computer. Connecting three readers to your computer enables you to ingest six cards simultaneously at full speed to complete the process — without swapping cards — in about one sixth the time required using a single-slot reader!

xMac mini Server

Rack It Up – Ready for Racking

Sonnet's SF3 Series pro card readers include threaded mount points that enable you to securely attach two readers side-by-side on a rack tray in just 1U of rack space.

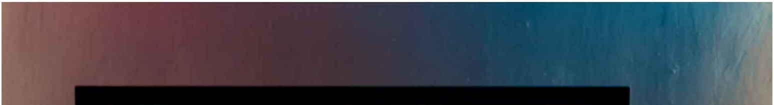

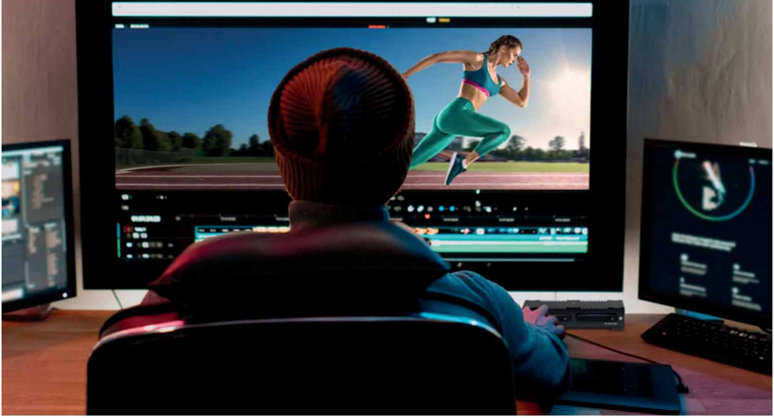

Compact, Rugged, Stackable – The PAK Media Card Reader for Digital Imaging Technicians (DITs)

For DITs working multi-camera shoots or in a small space, equipment size and design features matter. The SF3 Series – AJA PAK Media Pro Card Reader measures just 5.8 inches wide by 6.1 inches deep by 1.4 inches tall, making it suitable for use in any workspace and workflow.

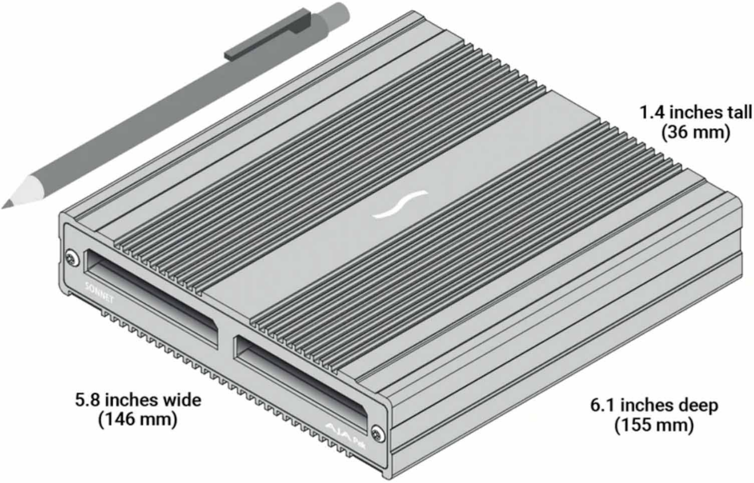

SONNET
CFast 2.0
SONNET
XQD
SONNET
SxS PRO X
SONNET
AJA Pak
SONNET
RED MINI-MAG®

Sonnet SF3 Series Pro Card Readers – Designed to be Stacked and Daisy Chained

SF3 Series pro card readers feature rugged aluminum enclosures designed to be stacked and daisy chained, enabling multiple AJA PAK Media, CFast™ 2.0, CFexpress™/XQD™, RED MINI-MAG®, and SxS™ PRO X readers to occupy the same footprint, while connecting to your computer through a single cable. You can take advantage of Thunderbolt's up to 2800 MB/s of PCIe 3.0 x4 bandwidth to ingest four, six, or more cards simultaneously!

Supports Full
40Gbps
Thunderbolt Bandwidth

All the Right Connections – 40Gbps Thunderbolt Cable and ThunderLok 3 Included

Sonnet includes a Thunderbolt cable that supports Thunderbolt's full 40Gbps bandwidth, and is fully compatible with Thunderbolt 4 and Thunderbolt 3 computers. Sonnet also provides a ThunderLok™ 3 Thunderbolt connector retainer clip that prevents accidental cable disconnections — just slide it over one end of the cable, and then plug in the connector and secure it to the reader by turning a thumbscrew. Because of its unique design, ThunderLok remains on the cable so it won't get lost when not in use.

Key Features

- Superior Ingest Performance
- Cuts Ingest Times in Half – Ingest Files from Two Cards up to 1030 MB/s Aggregate
- PCIe 3.0 x4 Thunderbolt Device
- Compact, Rugged, Stackable
- Rackable
- Two Thunderbolt Ports
- Apple® M1 and M2 Series Compatible
- Intel® Macs Compatible
- Windows® Compatible
- 2-year Product Warranty
- Free Lifetime Customer Technical Support
- Designed in the USA